VOLVO EW55B WHEELED MINI EXCAVATOR
SWING BEARING DIAGRAM

PART NUMBER & ALTERNATIVES:

1050-20110; 14530319; 14563337; 14517104

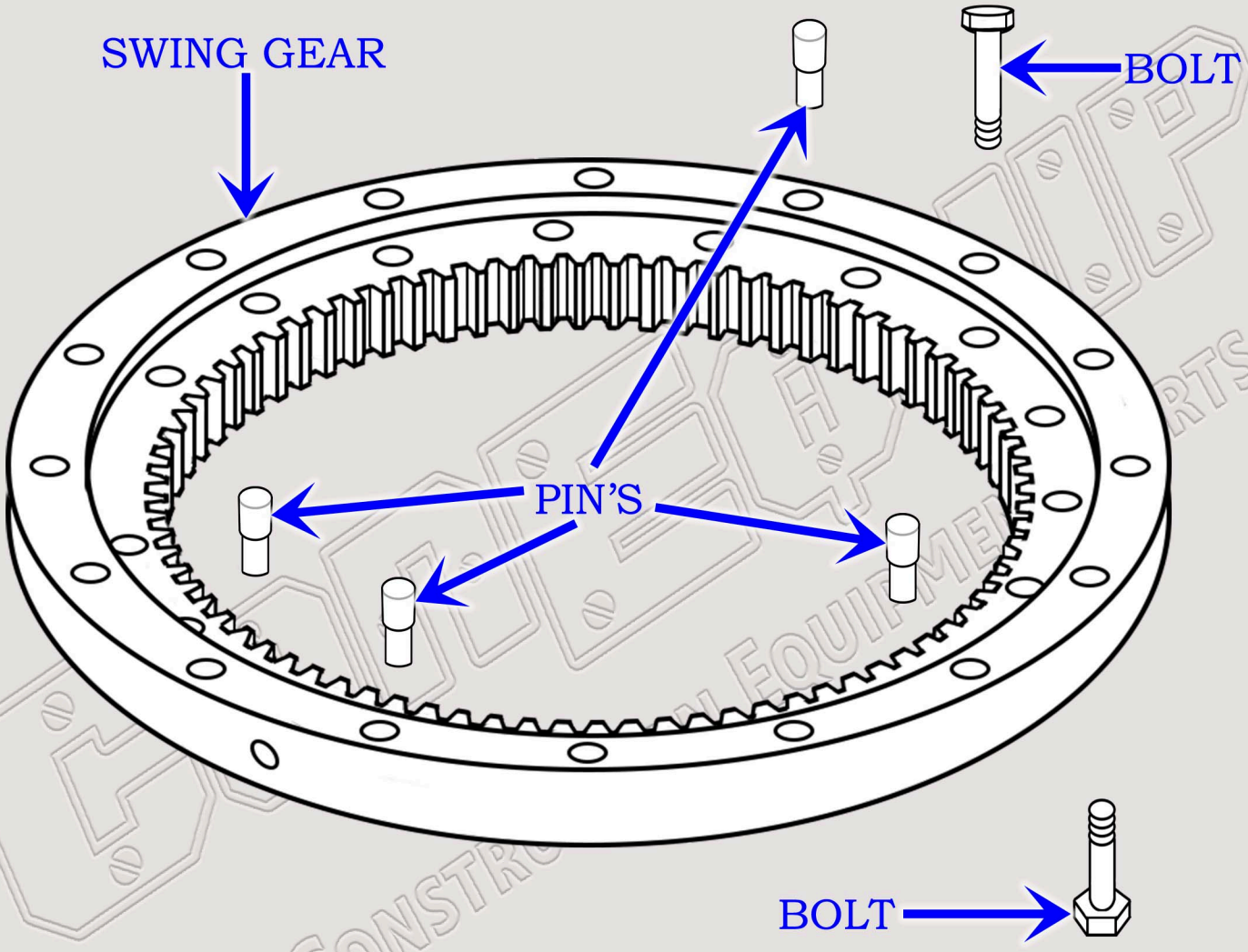

WWW.CONEQUIP.COM
888-983-7847

© 2018 CONEQUIP PARTS & EQUIPMENT LLC

VOLVO