KUBOTA K008-3 COMPACT EXCAVATOR
SWING BEARING DIAGRAM

PART NUMBER & ALTERNATIVES:

RA111-19110

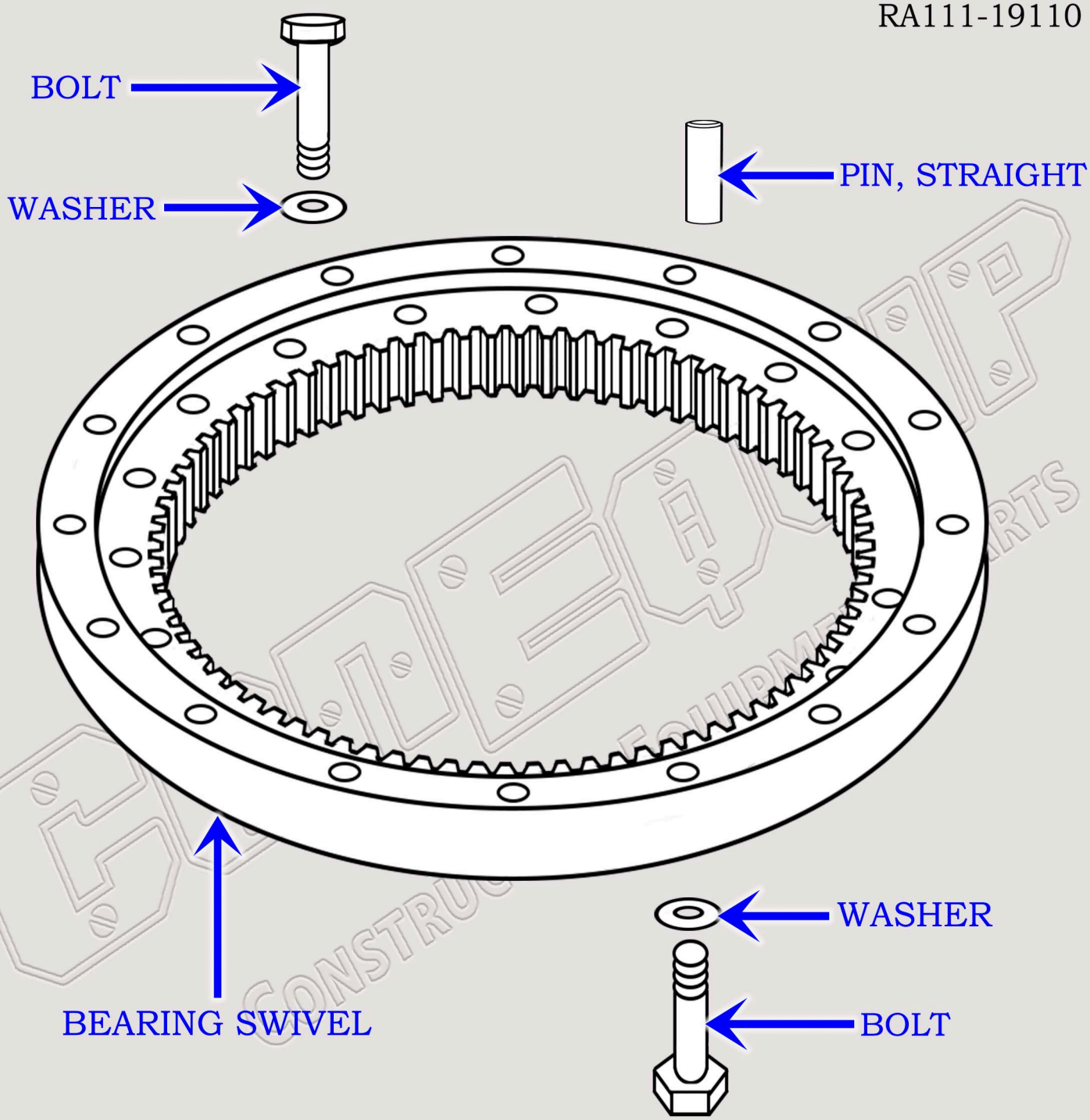

KUBOTA

888-983-7847

WWW.CONEQUIP.COM

© 2018 CONEQUIP PARTS & EQUIPMENT LLC