KOBELCO SK210LC-6 EXCAVATOR
SWING BEARING DIAGRAM

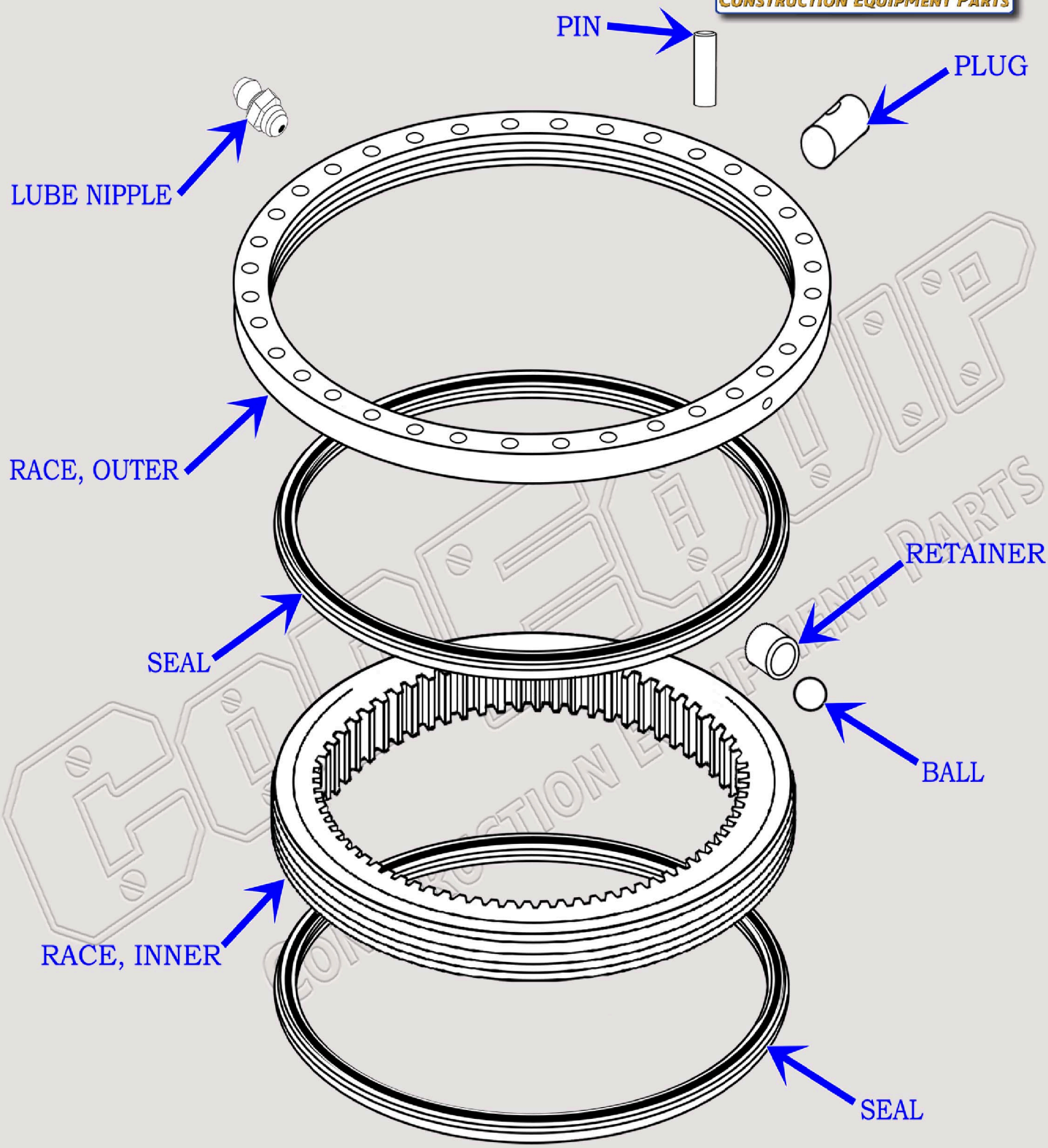

PART NUMBER & ALTERNATIVES:
YN40F00019F2; YN40F00012F1; YN40F00004F1

888-983-7847
WWW.CONEQUIP.COM
© 2018 CONEQUIP PARTS & EQUIPMENT LLC

KOBELCO