KOBELCO SK20SR-2 COMPACT EXCAVATOR
SWING BEARING DIAGRAM

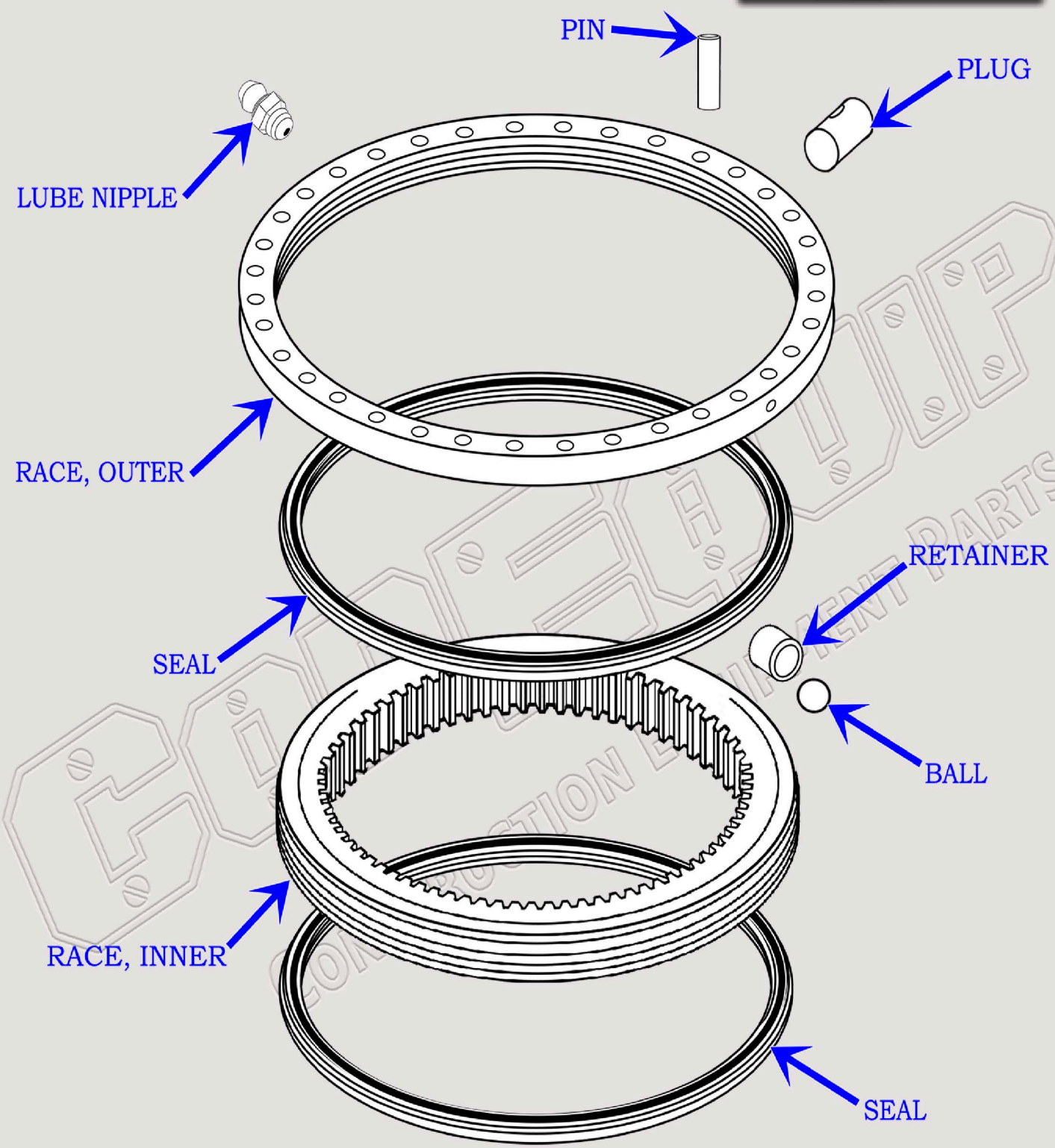

PART NUMBER & ALTERNATIVES:
PM40F00014F1; PV40F00006F1

888-983-7847
WWW.CONEQUIP.COM
© 2018 CONEQUIP PARTS & EQUIPMENT LLC

KOBELCO