KOBELCO SK170-8 EXCAVATOR
SWING BEARING DIAGRAM

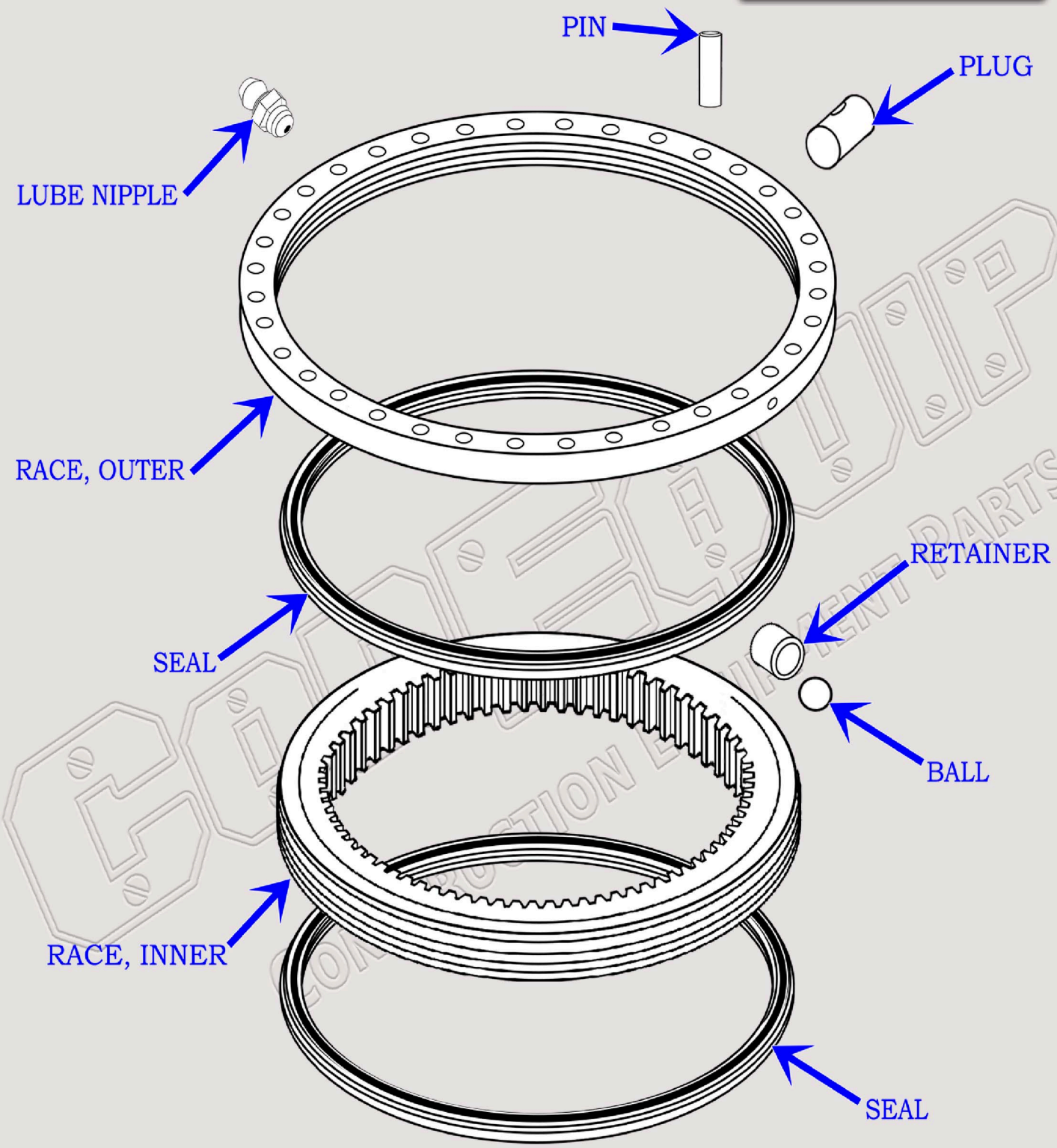

PART NUMBER & ALTERNATIVES:
YM40F00006F1

888-983-7847
WWW.CONEQUIP.COM
© 2018 CONEQUIP PARTS & EQUIPMENT LLC

KOBELCO