HYUNDAI R130W EXCAVATOR
SWING BEARING DIAGRAM

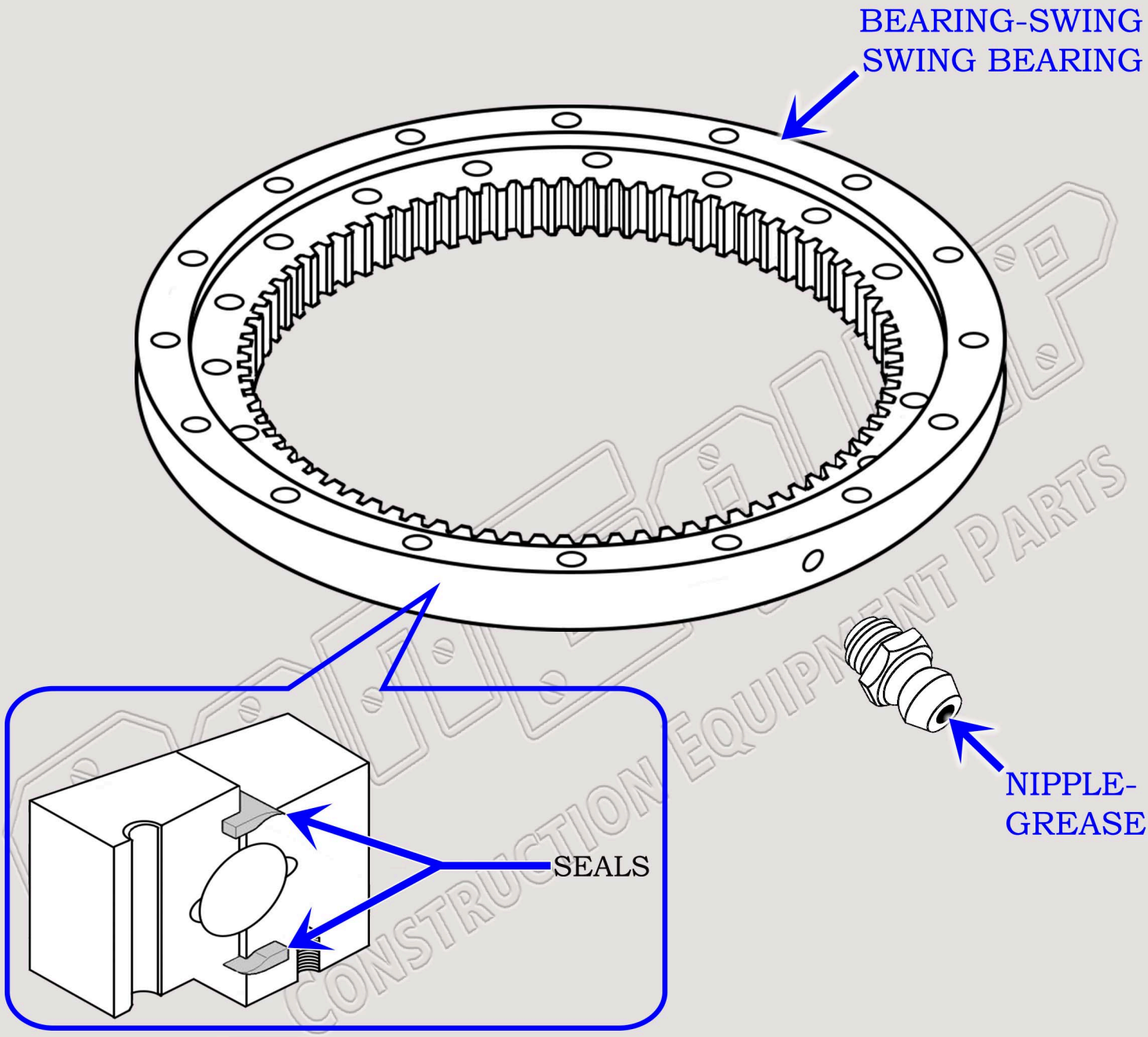

PART NUMBER & ALTERNATIVES:
81E3-10010

HYUNDAI

ConEquip
Construction Equipment Parts
888-983-7847
WWW.CONEQUIP.COM
© 2018 CONEQUIP PARTS & EQUIPMENT LLC