HITACHI ZX40UR-2D EXCAVATOR
SWING BEARING DIAGRAM

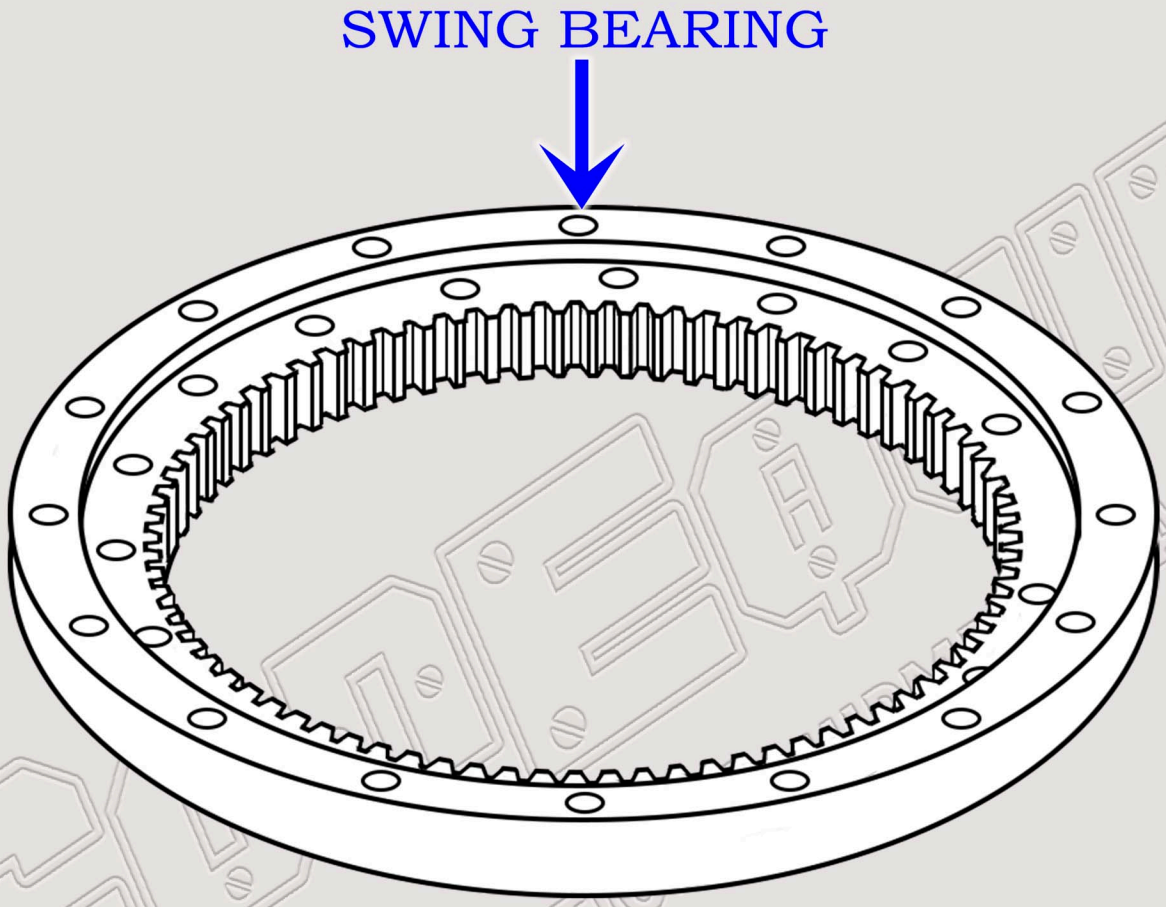

PART NUMBER & ALTERNATIVES:
4606438, 4723481
MAY ALSO BE CALLED:
ZAXIS40UR-2D

888-983-7847
WWW.CONEQUIP.COM
© 2018 CONEQUIP PARTS & EQUIPMENT LLC