# HITACHI UH045-5 EXCAVATOR
## SWING BEARING DIAGRAM

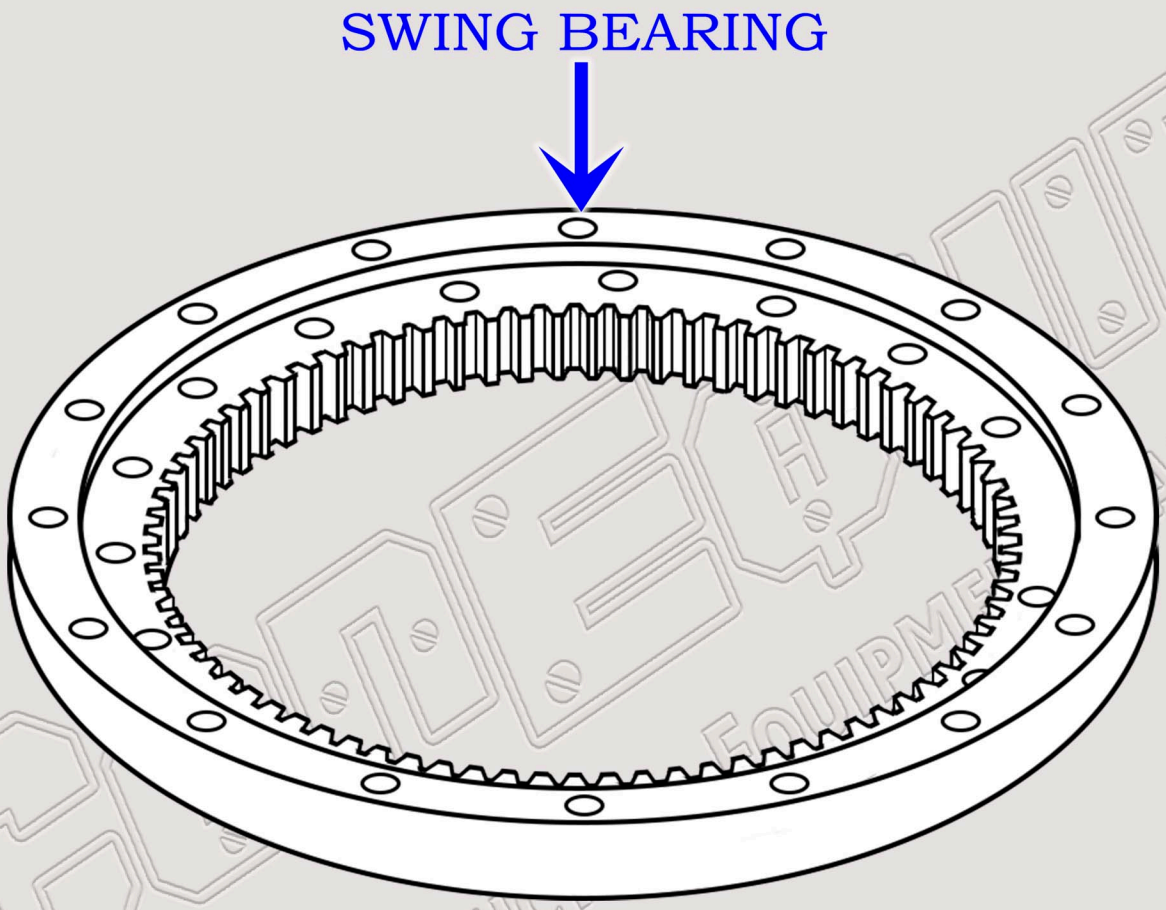


PART NUMBER & ALTERNATIVES:
4085284, 9023670

888-983-7847
WWW.CONEQUIP.COM
© 2018 CONEQUIP PARTS & EQUIPMENT LLC