HITACHI EX1800-2 EXCAVATOR
SWING BEARING DIAGRAM

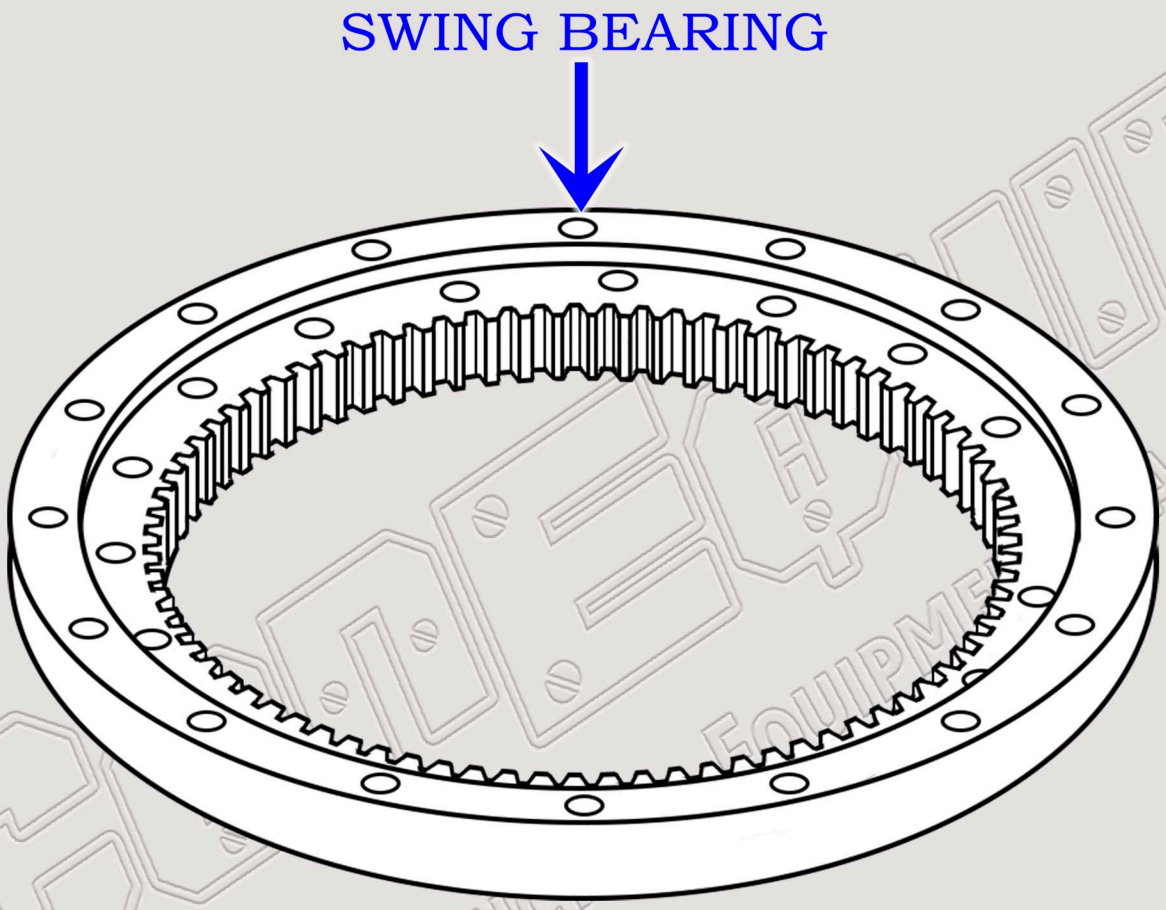

PART NUMBER & ALTERNATIVES:
4363205, 6017664, 9321219

888-983-7847
WWW.CONEQUIP.COM
© 2018 CONEQUIP PARTS & EQUIPMENT LLC