CAT 385CL EXCAVATOR
SWING BEARING DIAGRAM

PART NUMBER & ALTERNATIVES:

199-4491; 227-6099; 2276098

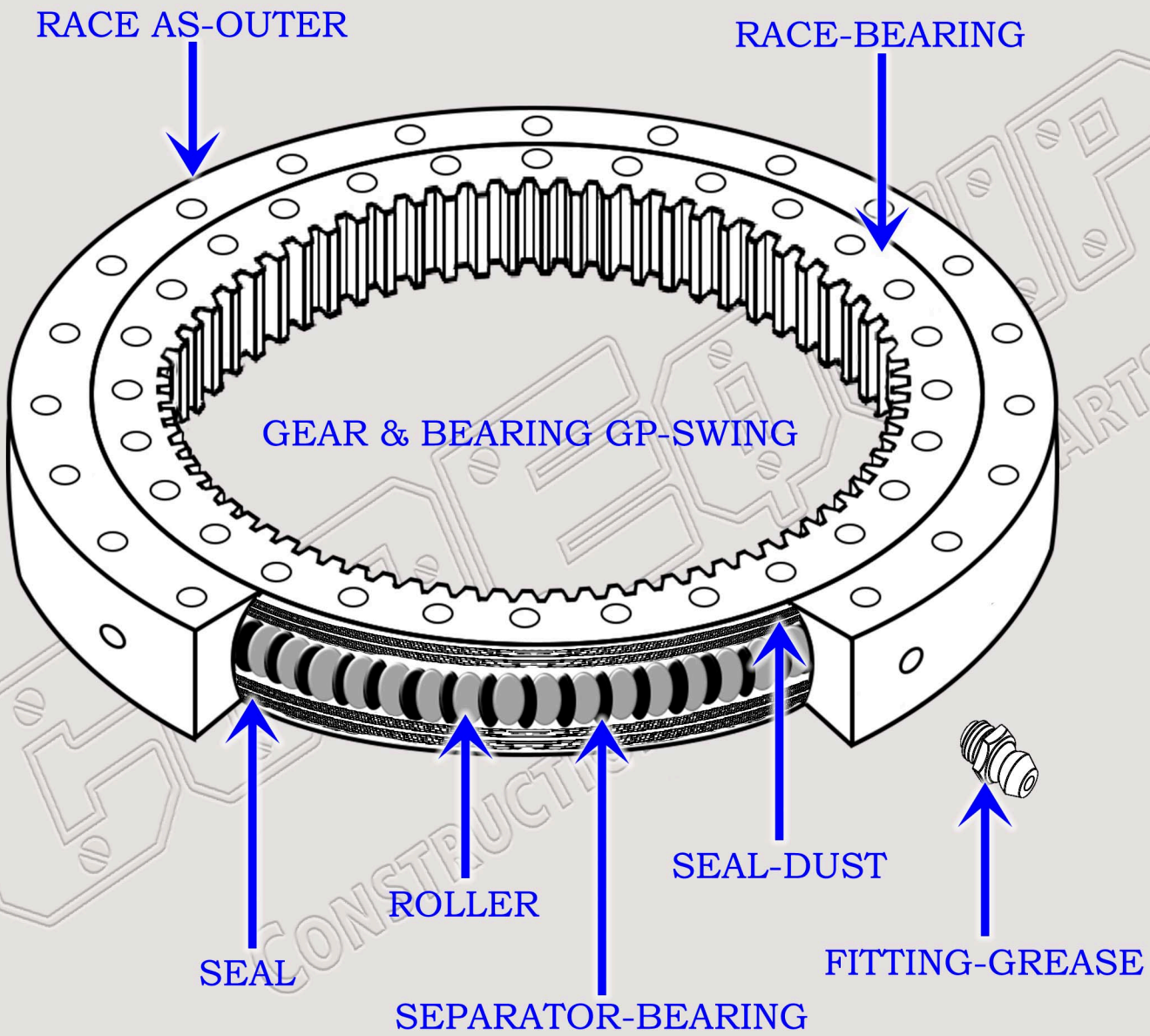

CATERPILLAR

ConEquip
Construction Equipment Parts
888-983-7847
WWW.CONEQUIP.COM

© 2018 CONEQUIP PARTS & EQUIPMENT LLC