CAT 308E2 SR MINI EXCAVATOR
SWING BEARING DIAGRAM

PART NUMBER & ALTERNATIVES:

171-9393; 240-8362

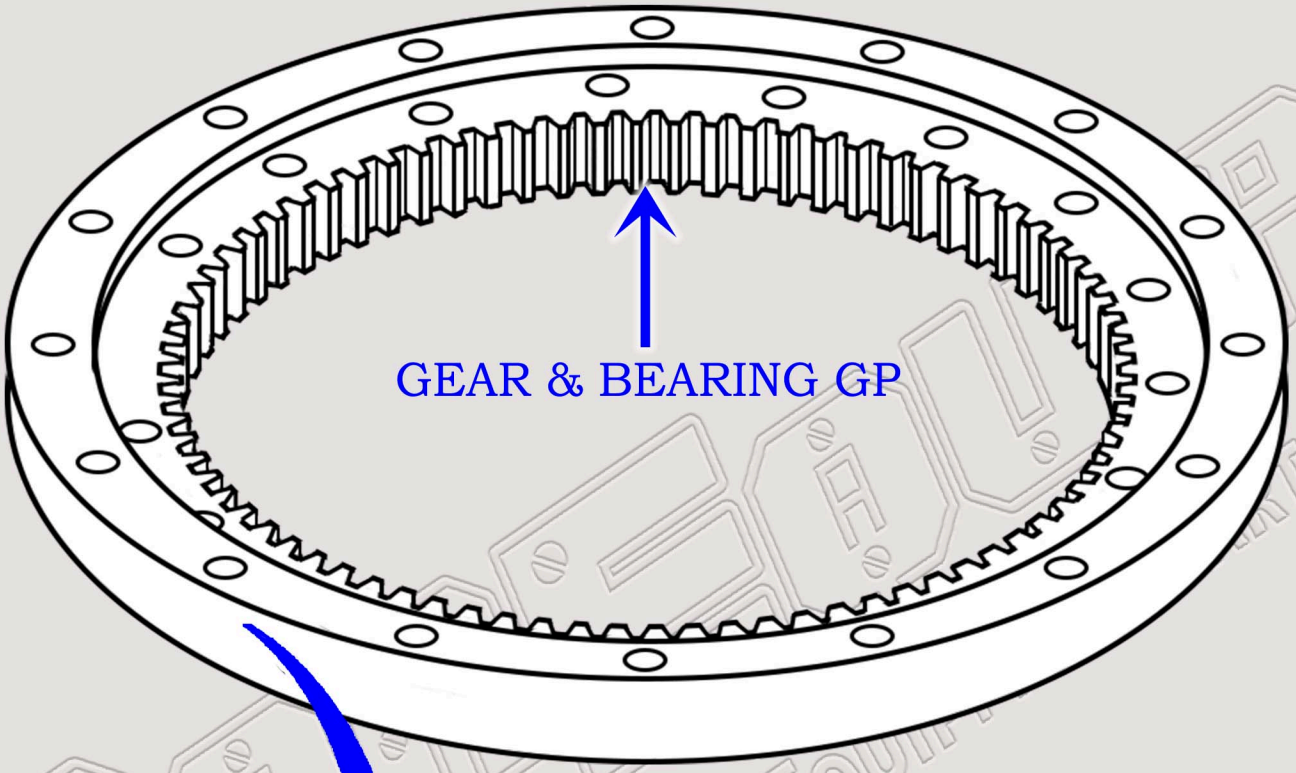

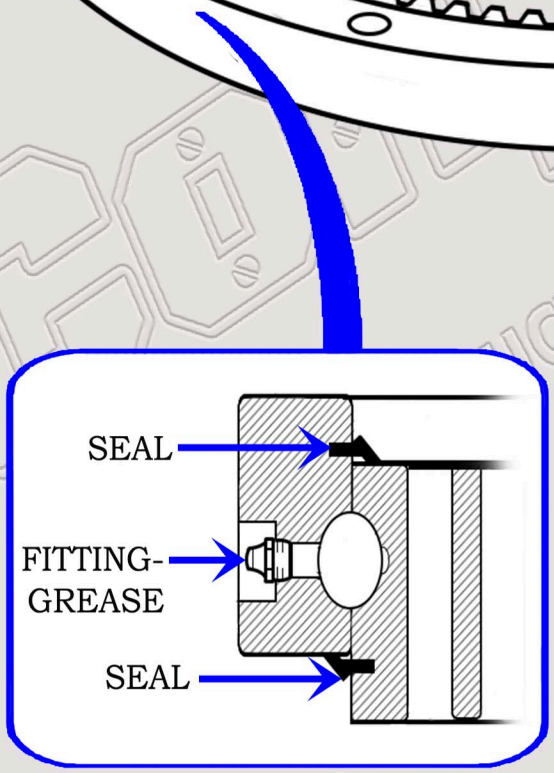

CATERPILLAR

ConEquip
Construction Equipment Parts
888-983-7847
WWW.CONEQUIP.COM
© 2018 CONEQUIP PARTS & EQUIPMENT LLC